# N TORQUE WRENCH 13/16" HEAD

UCL-ST1N

## SPECIFICATIONS

TORQUE: 14 IN-LBS
HEAD SIZE: .8125" (20.64 mm)
TORQUE TOLERANCE: ±8%

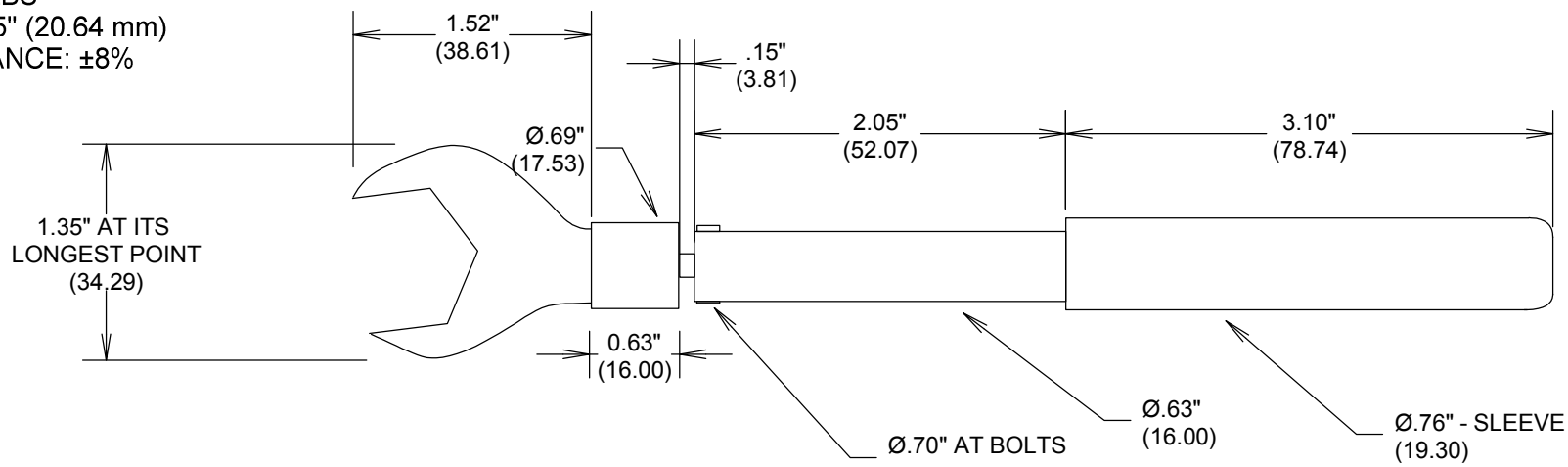


| | | | |
|---|---|---|---|
| UNIVERSAL COOPERATE LTD. | **Universal Cooperate Ltd.**<br>Web:www.ucl-microwave.com | | 46 Langham Rd<br>Edgware,<br>HA8 9EL The UK |
| TITLE<br>N TORQUE WRENCH 13/16" HEAD | | | |
| SIZE<br>A | CAGE CODE | MODEL<br>UCL-ST1N | REV<br>A |
| SCALE 1:1 | DOC FAMILY ST | SHEET 1 OF 1 | |