UNIVERSAL COOPERATE LTD.

## Model UCL-VA100

## Continuous Variable Attenuator

## 100 Watts DC-4GHz

Continuous variable attenuators can be used to adjust the power signal level continuously within certain frequency range without power off, they can also be used to adjust the test system's power level as inset attenuators, it is small with high accuracy and high stability etc.

UCL-VA100 continuous variable attenuators' average power 100W, frequency range from 0.9-4GHz.

**NOMINAL IMPEDANCE:** 50Ω
**AVERAGE POWER:** 100W.
**TEMPERATURE RANGE:** -40°C～+65°C
**CONNECTOR TYPE:** N
**WEIGHT:** 2Kg
**PHYSICAL DIMENSIONS:** 190×102×75mm

| Model Number | Frequency Range(GHz) | Bandwidth (MHz) | Attenuation Range | Max VSWR | Insertion Loss(dB) |
|---|---|---|---|---|---|
| UCL-VA100-10 | 0.9-4 | 100 | 0-10 | 1.5 | ≤1.0 |
| UCL-VA100-20 | | | 0-20 | | |

## Outline Drawings

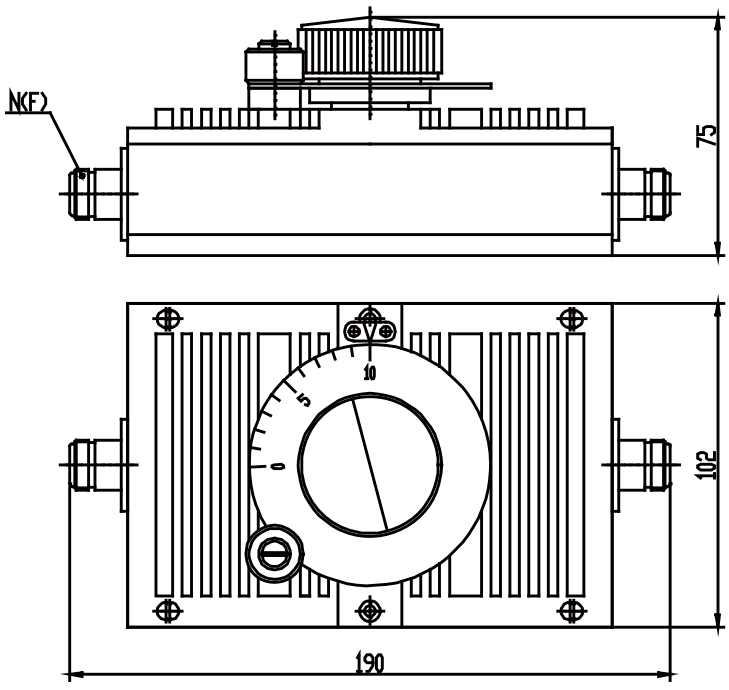


* Dimensions are given in mm and tolerance ±2%.
** VSWR varies according to frequency and attenuation value.
*** VSWR and dimensions refer to connector type N.



Universal Cooperate Ltd.
Rep Office:46 Langham Rd Edgware,HA8 9EL The UK
Web: www.ucl-microwave.com Email: sales@ucl-microwave.com