UNIVERSAL COOPERATE LTD.

Model UCL10-50-TVV

High Power Resistors

10Watts DC-4GHz

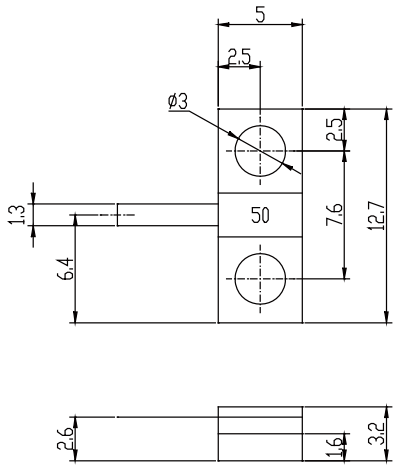

SPECIFICATIONS

Max VSWR：≤1.3

Standard Resistance：50Ω

Capacitance: 0.75pF

Temperature Range: 0.68 ^{0}C/W

Dimensions：12.7×5×3.2mm

Model UCL20-100RP

High Power Resistors

20Watts DC-2GHz

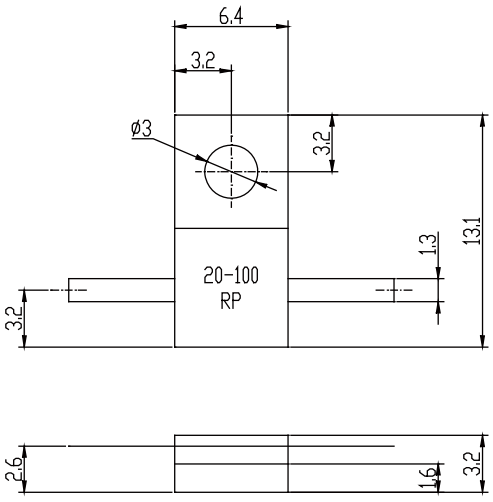

SPECIFICATIONS

Max VSWR：≤1.25

Standard Resistance：100Ω

Capacitance: 0.2pF

Temperature Range: 0.68 ^{0}C/W

Dimensions：13.1×6.4×3.2mm

Note:1、Resistance tolerance: standard tolerance ±5%,±2%.

2、 Resistance range: 0.5-20000Ω, standard 50-100Ω.

3、 Use additional lumped element and matched line to get lower VSWR.

4、 Operation board and lead can be made according to customer's demand.

5、 Machining tolerance is ±0.10, shortest lead length is 3.8mm, except special note.

6、 Resistances without bottom board are expressed with –W at the end of model no.

7、 Custom designed for special demand.

Universal Cooperate Ltd.
Rep Office:46 Langham Rd Edgware,HA8 9EL The UK
Web: www.ucl-microwave.com Email: sales@ucl-microwave.com